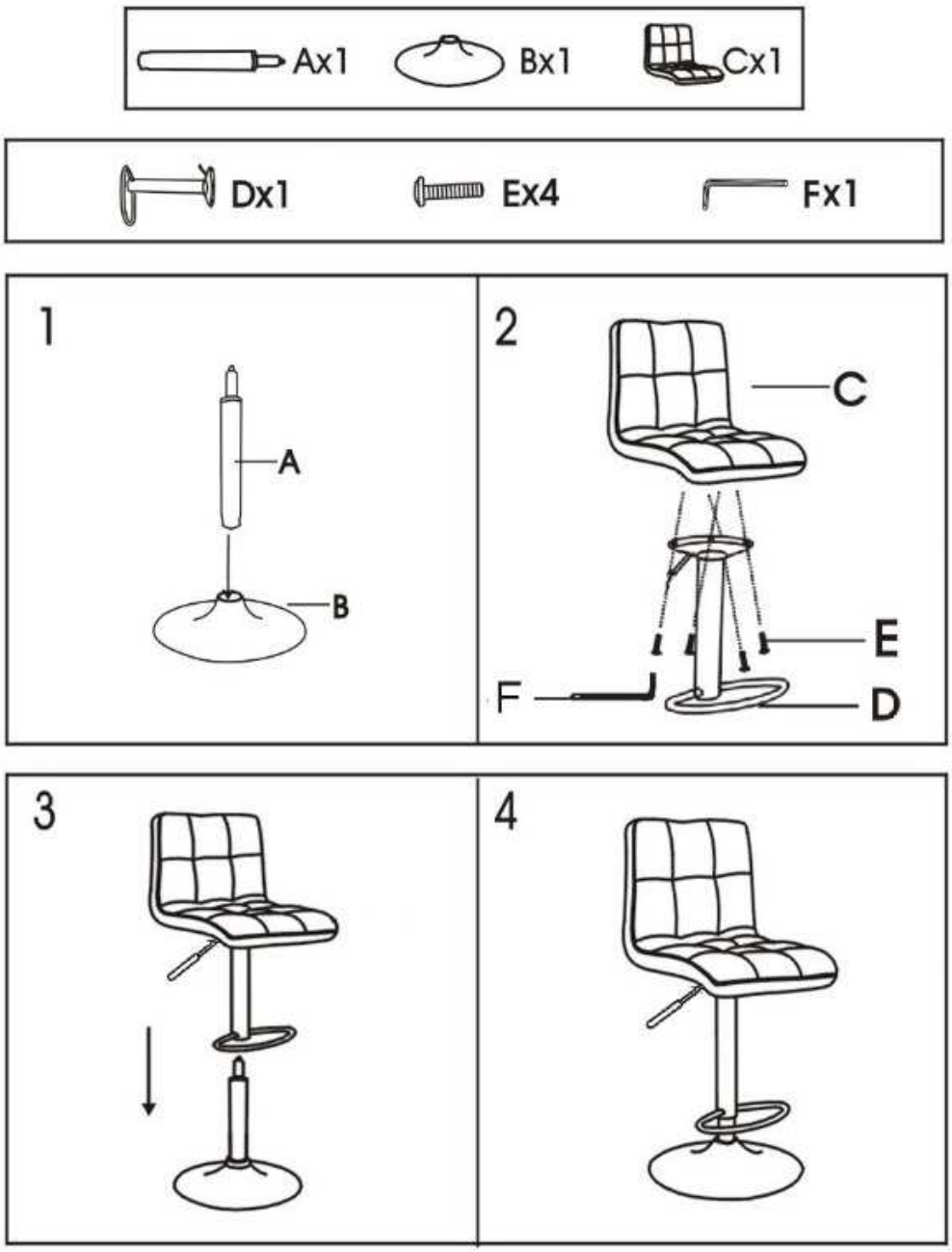
Ax1
Bx1
Cx1
Dx1
Ex4
Fx1
1
A
B
2
C
E
F
D
3
4